RTM210.140A

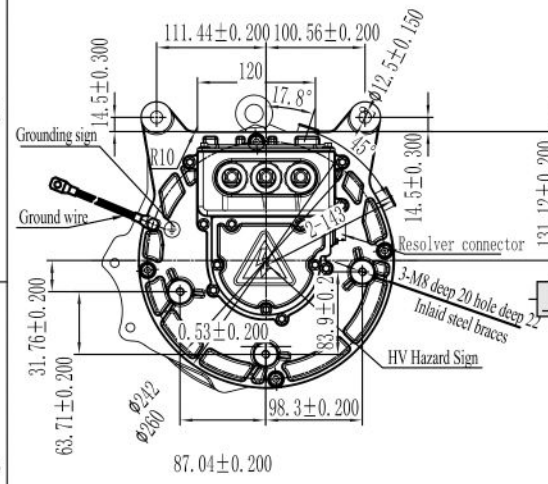

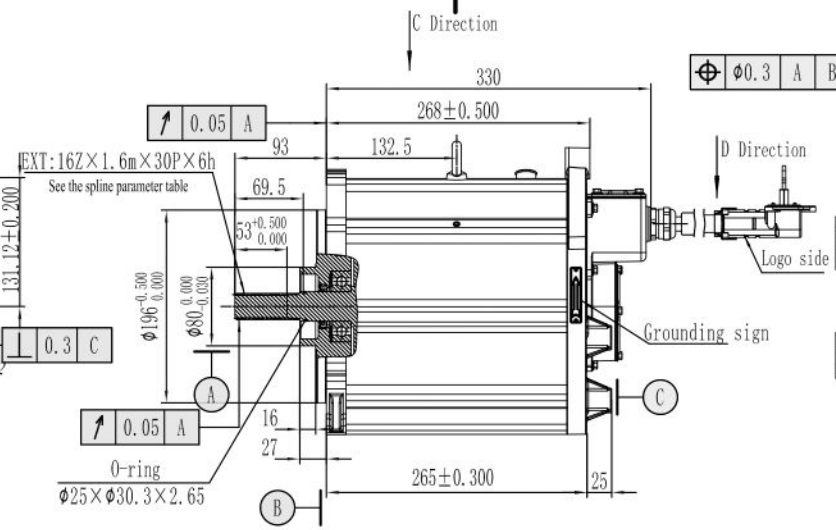

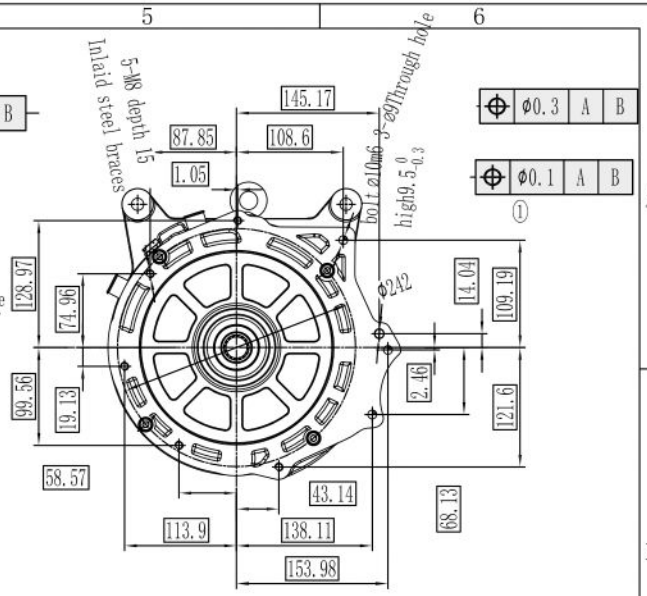

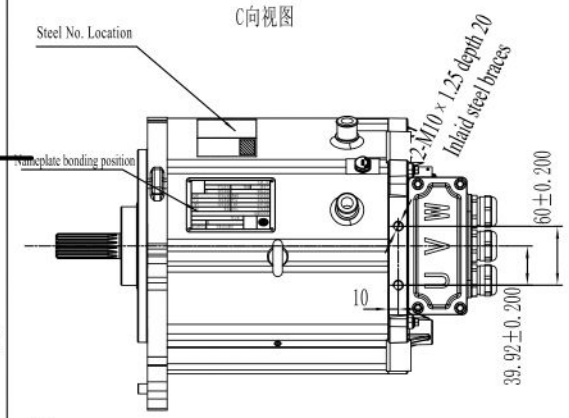

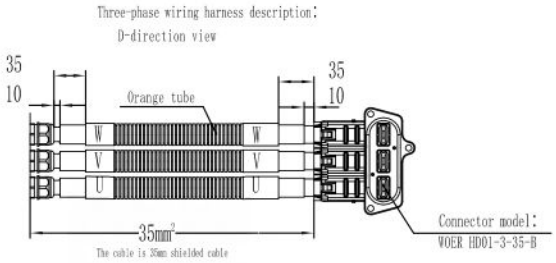

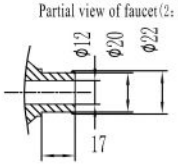

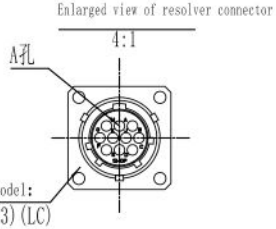

Notes:

1. The unmarked size and angle tolerance shall be implemented according to GB/T1804-m, and the unmarked shape and position tolerance shall be implemented according to GB/T1184-K;
2. When the motor is assembled, the thread is tightened and the thread tightening glue is added. The torque refers to the drawing standard. Each thread needs to be crossed, symmetrically, gradually and evenly tightened. After the torque is pre-tightened, the oil pen is marked;
3. Withstand voltage test: 2000V to ground and between phases, 1min;
4. Cooling method: water cooling, water pressure detection: 0.5MPa, no leakage in 3min (use antifreeze);
5. The motor mating surface is oiled to prevent rust, the shaft extension end is protected, and the inlet and outlet water nozzles are protected by a protective cover;
6. During the debugging process of the motor, the operation is flexible, there is no sticking, and there is no abnormal sound;
7. Motor protection grade: IP67;
8. Motor insulation class: H class;
9. Minimum bending radius of shielded cable: R110;
10. When transporting, prevent bumping, and require ventilation and drying during storage.

Grounding Harness Schematic
1:1

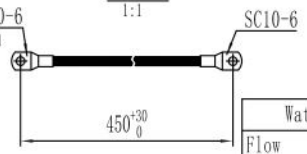

Water nozzle notes	
Flow	15 L/min
Maximum stress on the system	0.5Mpa
Inlet temperature	≤65° C
Coolant Type	Antifreeze coolant for car

Involute spline parameters		
Modulo	m	1.6
number of teeth	Z	16
Tooth angle	α	30°
Radial displacement coefficient	Xn	0
Accuracy class	6h GB/T3478.1	
span distance	MRe	27.907 0 -0.105
Measuring rod diameter	dP	φ2.24±0.001
Spline major diameter	dee	26.9 0 -0.13
spline diameter	die	22.72
Actual tooth thickness max.	Smax	2.478
Actual tooth thickness minimum	Smin	2.418
Involute starting circle diameter	DFemax	23.912

RIFT motor solutions